QuSector S24-14HV-30-2 Nf

QuSector S24-14HV-30-2 offers a 30 degrees, 14dBi gain signal with two 2.4GHz connectors. It is a perfect indoor and outdoor device for industrial installations.

QuSector S24-14HV-30-2 is a single band, H&V polarity, MIMO 2x2 panel antenna. Two connectors operate at 2.4GHz with 14dBi gain. Due to its medium gain, it can be used on short or medium distances, for example for hotspots in schools, stadiums, offices or public places. High quality injection moulded enclosure allows to implement it alongside with indoor and IP67 outdoor solutions. The antenna comes with two 70cm (28inch) cables. The antenna comes with 2*Nf connectors.

WiFi 2.4GHz | 2x2 MIMO | 2.4GHz | 14 dBi | DIRECTIONAL | IP 67 | -40° TO +80°

WI-FI SPECIFICATION

FREQUENCY	2.3 - 2.7GHz
GAIN	14 dBi
VSWR	< 1.80
BEAMWIDTH	30°/30°
POLARIZATION	Horizontal Vertical
IMPEDANCE	50 Ω
SEPARATION BETWEEN CONNECTORS	> 32dB
FRONT-TO-BACK	> 30dB
MAX INPUT POWER	50W
DC GROUND	Yes

MECHANICAL SPECIFICATION

MATERIAL	ABS
CONNECTOR	2xNf
OUTER DIMENSIONS	29.2 x 48.6 x 10.6 cm 11.5 x 19.13 x 4.17 inch
WEIGHT	2.5 kg
OPERATING TEMPERATURE	-40°C to +80°C -40°F to 176°F

Copyright © 2023, Wireless Instruments. Specifications and information given in this document are subject to change without prior notice.

MOUNTING KIT

DIMENSIONS	9.9 x 10.5 x 14.8 cm 3.9 x 4.13 x 5.83 inch
REGULATION RANGE	+/- 30°
MAST DIAMETER RANGE	25 - 60mm 0.98-2.36 inch
MATERIAL	Polyamide with fiberglass + galvanized steel U-Bolts
MOUNTING PLACE	Wall or ceiling or mast

COMPATIBLE ROUTERS

VARIANT: SS24.14HV.30.2NF

TELTONIKA	RUT900, RUT901, RUT950, RUT951, RUT955, RUT956
ROBUSTEL	R1520 Global, R1520-4L (S), R1520-4L (V), R2010, R2011
RAJANT	BreadCrumb ES1–2450CS, BreadCrumb LX5-2255B, BreadCrumb LX5-2255C, BreadCrumb LX5-2295C, BreadCrumb LX5-2455D, BreadCrumb LX5-2955C, Hawk BreadCrumb FE1-2450 / FE1-2450A, Peregrine LTE BreadCrumb FE1-2455LS, Peregrine LTE BreadCrumb FE1-2455LW, Sparrow BreadCrumb ME5-2450CS
COMSET	CM210A-W, CM210Q-W, CM685V-1, CM685V-4, CM685V-6, CM685V-6-G
D-LINK	DAP-2310, DAP-2360
ERICSSON (CRADLEPOINT)	IBR600C, W4005
PROROUTE	H685 LTE 4G CAT6 Router, H685 WRT M2M 5G Router, H900 5G Router

Copyright © 2023, Wireless Instruments. Specifications and information given in this document are subject to change without prior notice.

RAJANT	BreadCrumb ES1–2450CS, BreadCrumb LX5-2255B, BreadCrumb LX5-2255C, BreadCrumb LX5-2295C, BreadCrumb LX5-2455D, BreadCrumb LX5-2955C, Hawk BreadCrumb FE1-2450 / FE1-2450A, Peregrine LTE BreadCrumb FE1-2455LS, Peregrine LTE BreadCrumb FE1-2455LW, Sparrow BreadCrumb ME5-2450CS
ROBUSTEL	R1520 Global, R1520-4L (S), R1520-4L (V), R2010, R2011
TELTONIKA	RUT900, RUT901, RUT950, RUT951, RUT955, RUT956
WAVETEL	W240 4G/LTE, W4600, W4600-S2
WLINK	R220, R520

PLOTS

From 2.4GHz to 2.5GHz

PORT 1 ELEVATION

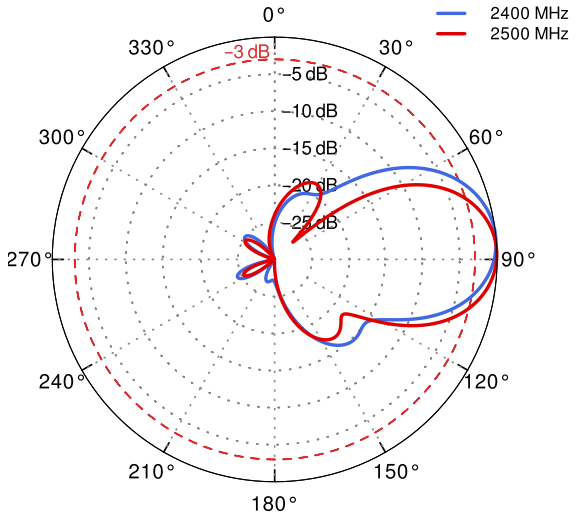

PORT 1 AZIMUTH

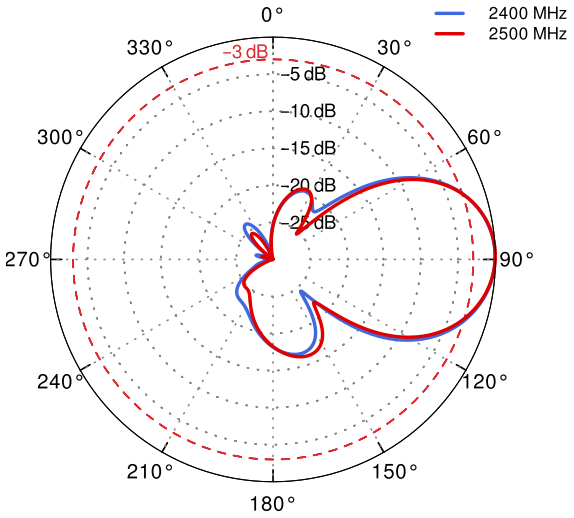

Copyright © 2023, Wireless Instruments. Specifications and information given in this document are subject to change without prior notice.

From 2.4GHz to 2.5GHz

PORT 2 ELEVATION

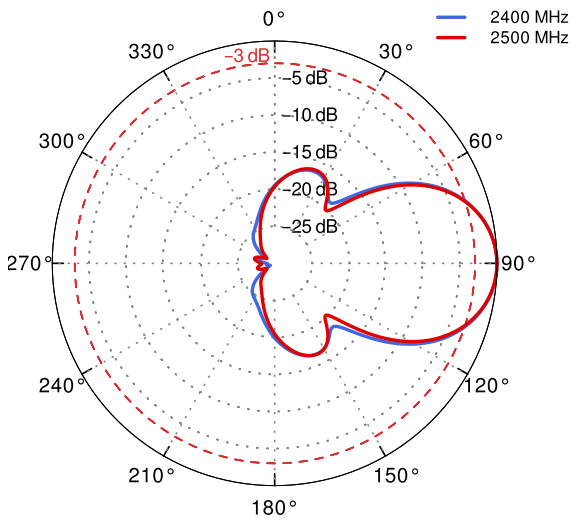

PORT 2 AZIMUTH

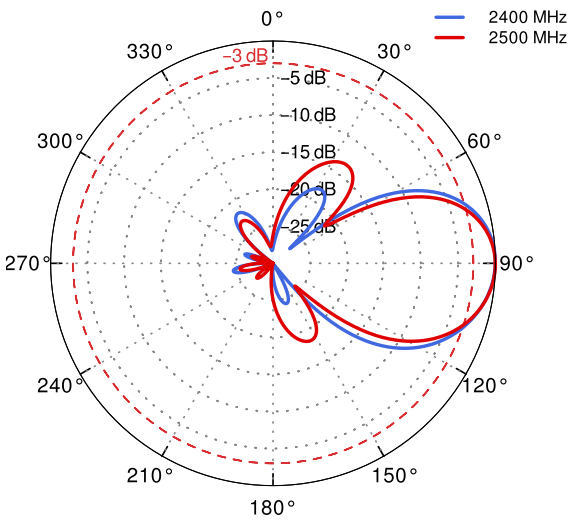

DIMENSIONS

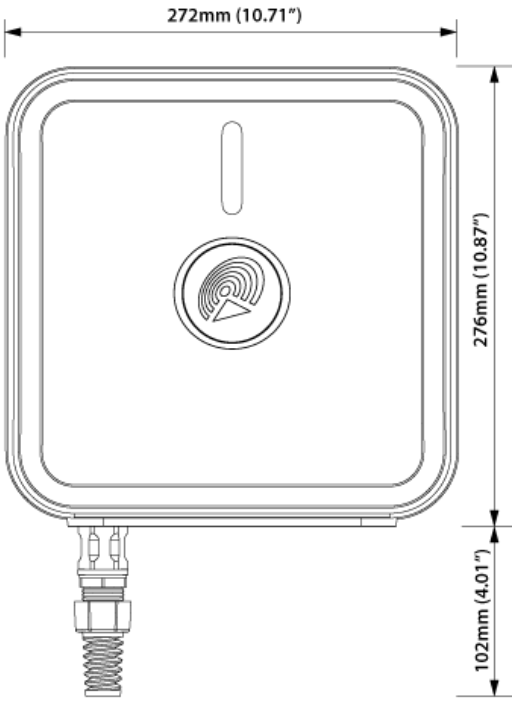

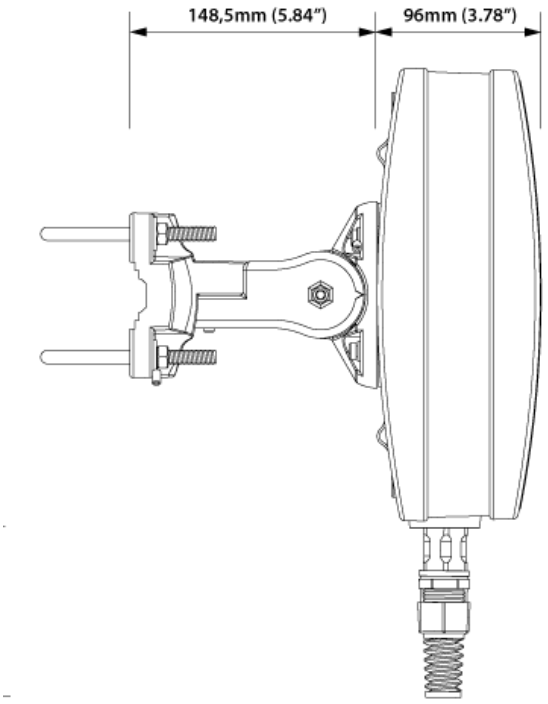

QuWireless
WWW.QUWIRELESS.COM
Sales email: sales@quwireless.com **Tel:** +48 513 900 416
Support email: support@quwireless.com **Website:** www.quwireless.com
Address: Wireless Instruments Sp. z o.o., ul. Kościuszki 27, 52-116 Iwiny, Poland

Copyright © 2023, Wireless Instruments. Specifications and information given in this document are subject to change without prior notice.