QuOmni LTE SISO Nf

Omnidirectional multiband LTE SISO antenna

QuOmni LTE omnidirectional SISO LTE outdoor antenna operates with vertical polarization and is designed for LTE/3G/2G connections. It supports various popular LTE bands (such as 3, 7, 20) across frequencies ranging from 694 MHz to 2700 MHz.
This versatile antenna can be mounted on either on pole or wall. It can be used as an outdoor client antenna, or it can be installed on mobile platforms like trains, buses, trucks, yachts, and boats to enable LTE/3G internet reception.
Using integrated Nf connectors allows to connect cables of any length.

4G LTE | SISO | 694-2700MHz | 4 dBi | OMNI DIRECTIONAL | IP 68 | -40° TO +80°

OUTDOOR ANTENNA WORKS IN **ANY WEATHER CONDITIONS**, IP68

GALVANIZED STEEL, WALL OR POLE MOUNTING BRACKET

INTEGRATED NF CONNECTOR

360° BEAMWIDTH

4DBI GAIN

MADE IN **EUROPE**

LTE ANTENNA SPECIFICATION

FREQUENCY	694 - 960 MHz 1.7 - 2.2 GHz 2.2 - 2.7 GHz
GAIN	694 - 960 MHz : 2 dBi 1.7 - 2.2 GHz : 2 dBi 2.2 - 2.7 GHz : 4 dBi
SUPPORTED LTE/5G BANDS	1, 2, 3, 4, 5, 6, 7, 8, 9, 10, 12, 13, 14, 17, 18, 19, 20, 23, 25, 26, 27, 28, 29, 30, 33, 34, 35, 36, 37, 38, 39, 40, 41, 44, 53, 59, 62, 65, 66, 67, 68, 69, 85, n80, n81, n82, n83, n84, n86, n89, n90, n95
VSWR	<1.60, max <2.00
BEAMWIDTH	360°/35° ±5°
POLARIZATION	Vertical
IMPEDANCE	50 Ω

Copyright © 2023, Wireless Instruments. Specifications and information given in this document are subject to change without prior notice.

MECHANICAL SPECIFICATION

MATERIALS	ABS, aluminum, PTFE
CONNECTOR TYPE	Integrated Nf
INGRESS PROTECTION	IP68
DIMENSIONS	160 x 160 x 240 mm 6.3 x 6.3 x 9.45 inch
WEIGHT	1.5 kg 3.31 lbs
OPERATING TEMPERATURE	From -40°C to 80°C From -40°F to 176°F
MAST DIAMETER	25-66 mm 0.98-2.60 inch

FREQUENCY BANDS

LTE / 4G GSM	617 MHz	5	6	8	12	13	14	17	960 MHz
		18	19	20	26	27	28	29	
		44	67	68	85	n81	n82	n83	
		n89							
LTE / 4G UMTS	1710 MHz	1	2	3	4	9	10	25	2170 MHz
		33	34	35	36	37	39	59	
		62	n80	n84	n86	n95			

Copyright © 2023, Wireless Instruments. Specifications and information given in this document are subject to change without prior notice.

LTE / 4G WCS DARS	2300 Mhz	30	40					2400 MHz
LTE / 4G	2400 MHz	7	38	41	53	69	n90	2700 MHz

COMPATIBLE ROUTERS

VARIANT: AOLS1-N

TELTONIKA	TRB140, TRB141, TRB142, TRB143, TRB145, TRB245, TRB246, TRB255
ROBUSTEL	EG5101, M1000 MP, M1200
FORTINET	Industrial GPS Modem F7916
FOUR-FAITH	4G LTE WiFi Modem F2X16 V4, LoRa Router F8936-L, Sim Card WiFi Router F3X26Q, Wireless 4G LTE Router F3X26-TB, Wireless M-Bus Gateway F-R100WM
MILESIGHT	UR32L, UR32S, UR41
ROBUSTEL	EG5101, M1000 MP, M1200
SIEMENS	6GK7243-7KX30-0XE0, 6GK7243-7SX30-0XE0
TELIT CINTERION	ME910G1 mPCIe Series
TELTONIKA	TRB140, TRB141, TRB142, TRB143, TRB145, TRB245, TRB246, TRB255
WAVETEL	WM21 4G Cat M/NB Modem
WLINK	M100, M303, R100, R200

Copyright © 2023, Wireless Instruments. Specifications and information given in this document are subject to change without prior notice.

PLOTS

VSWR

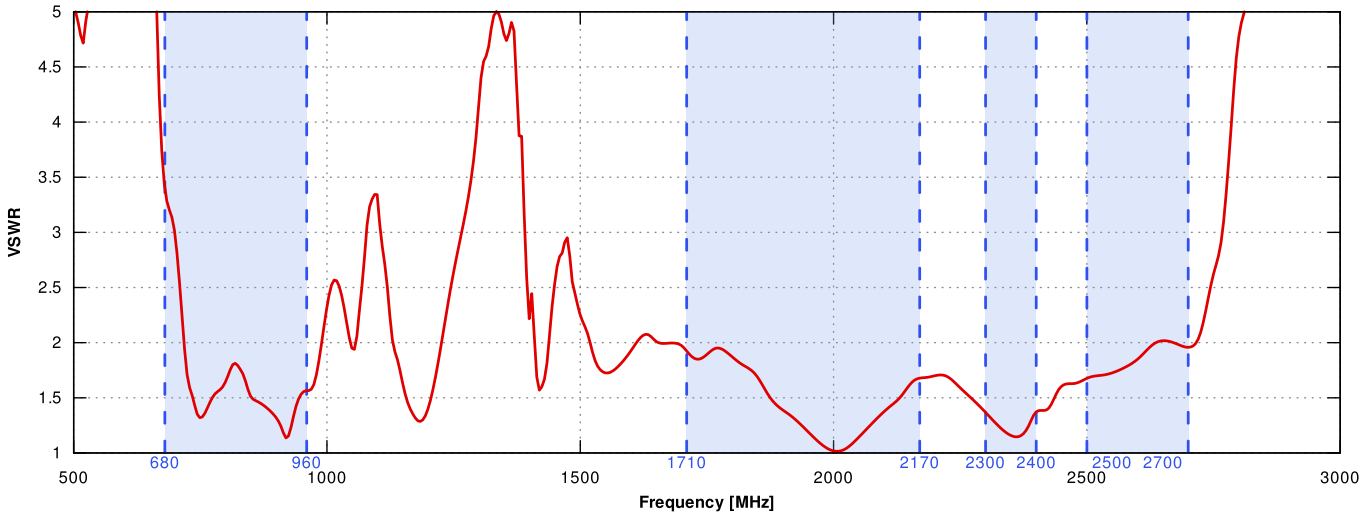

Gain

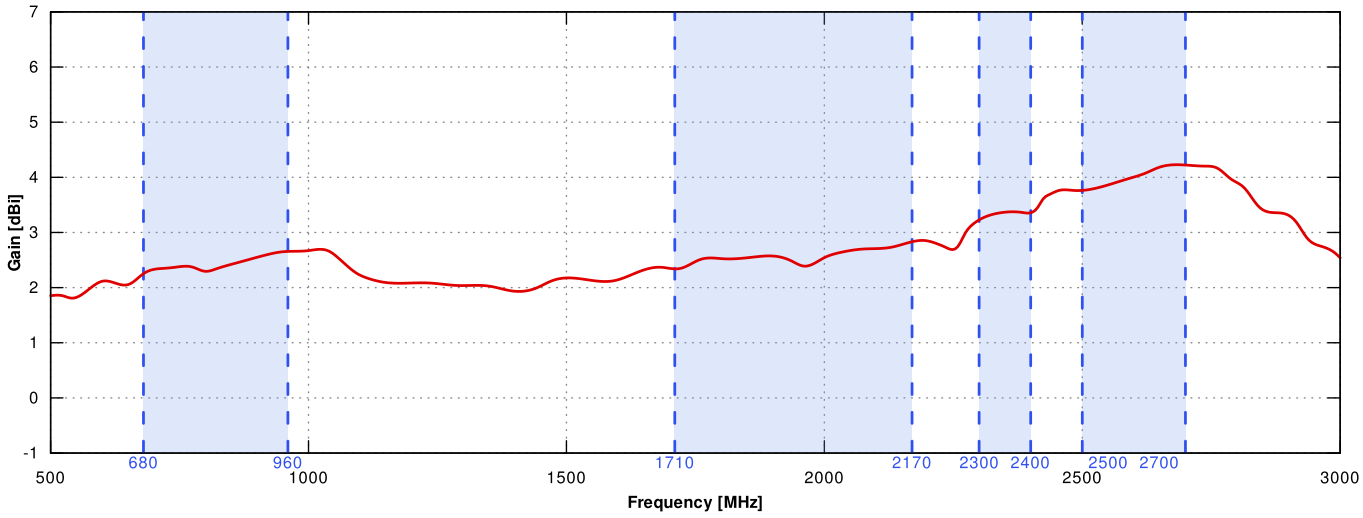

Copyright © 2023, Wireless Instruments. Specifications and information given in this document are subject to change without prior notice.

From 700MHz to 900MHz

ELEVATION

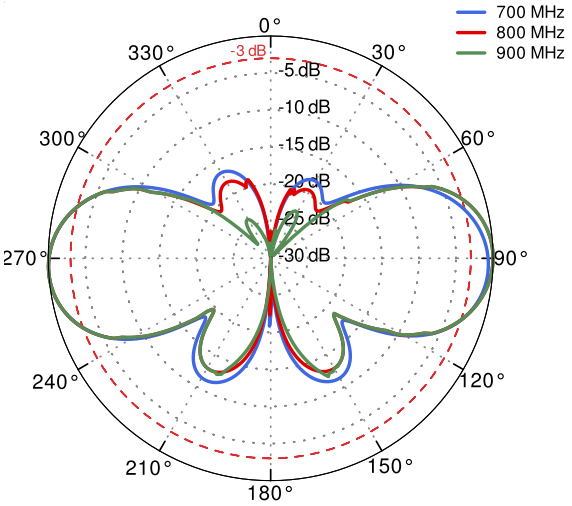

AZIMUTH

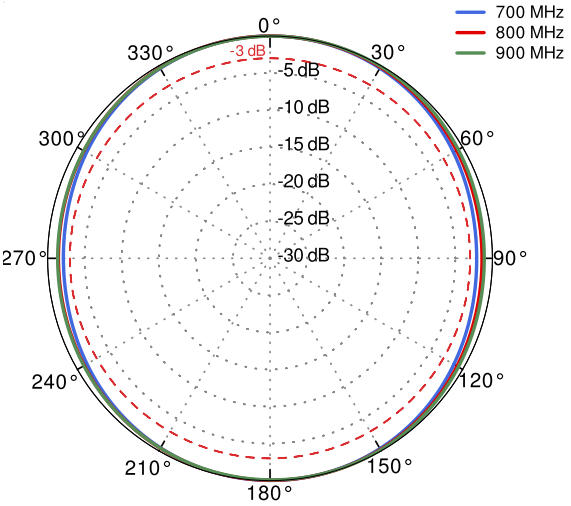

From 1.71GHz to 2.17GHz

ELEVATION

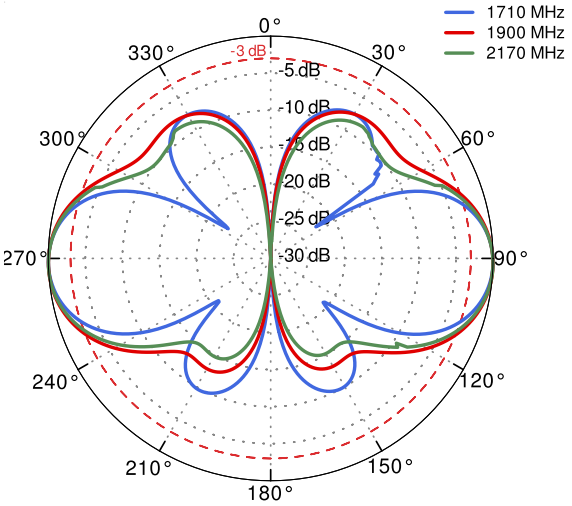

AZIMUTH

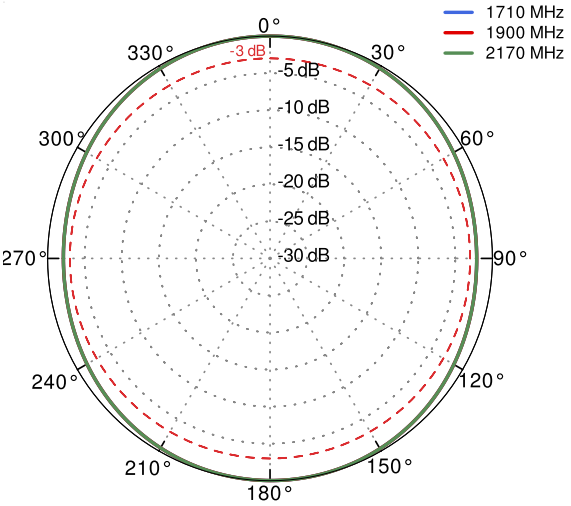

Copyright © 2023, Wireless Instruments. Specifications and information given in this document are subject to change without prior notice.

From 2.3GHz to 2.7GHz

ELEVATION

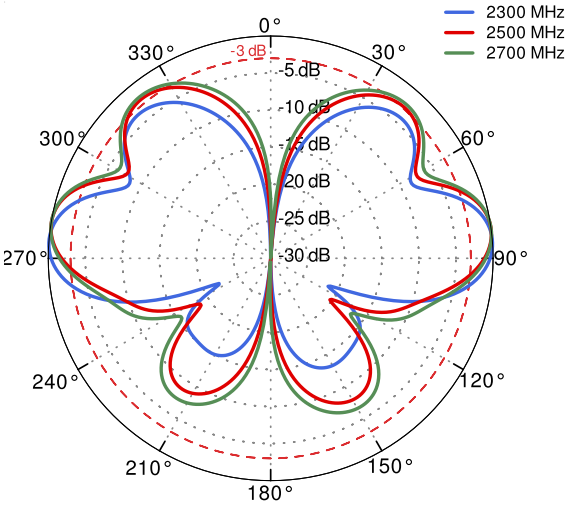

AZIMUTH

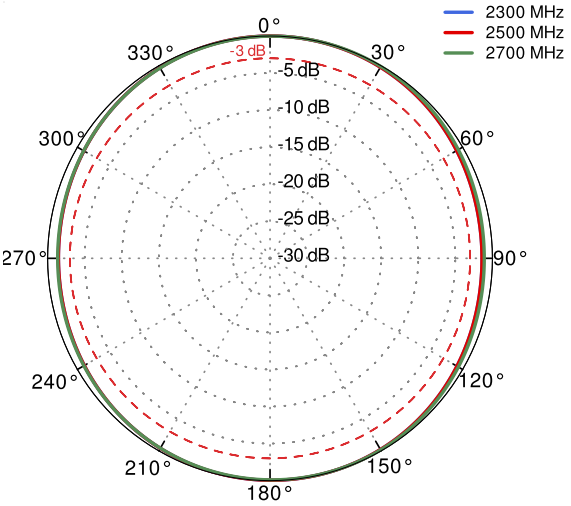

DIMENSIONS

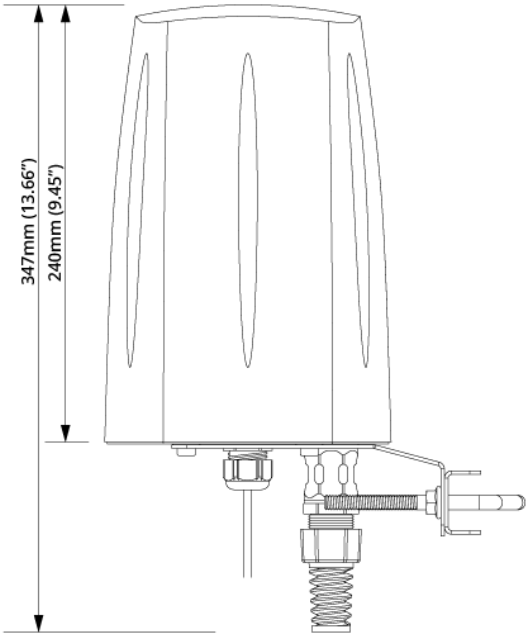

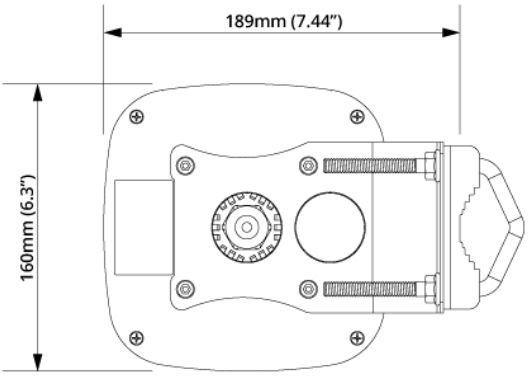

QuWireless
WWW.QUWIRELESS.COM
Sales email: sales@quwireless.com **Tel:** +48 513 900 416
Support email: support@quwireless.com **Website:** www.quwireless.com
Address: Wireless Instruments Sp. z o.o., ul. Kościuszki 27, 52-116 Iwiny, Poland

Copyright © 2023, Wireless Instruments. Specifications and information given in this document are subject to change without prior notice.