QuOmni LTE MIMO 4x4 Nf

Omnidirectional multiband LTE MIMO 4x4 antenna

QuOmni LTE omnidirectional MIMO 4x4 LTE outdoor antenna operates with vertical polarization and is designed for LTE/3G/2G connections. It supports various popular LTE bands (such as 3, 7, 20) across frequencies ranging from 694 MHz to 2700 MHz.
This versatile antenna can be mounted on either on pole or wall. It can be used as an outdoor client antenna, or it can be installed on mobile platforms like trains, buses, trucks, yachts, and boats to enable LTE/3G internet reception.
It is fully compatible with a range of Teltonika, Digi, Robustel as well as other MIMO 4x4 LTE/3G/2G modems and routers.

4G LTE | 4x4 MIMO | 694-2700MHz | 4 dBi | OMNI DIRECTIONAL | IP 68 | -40° TO +80°

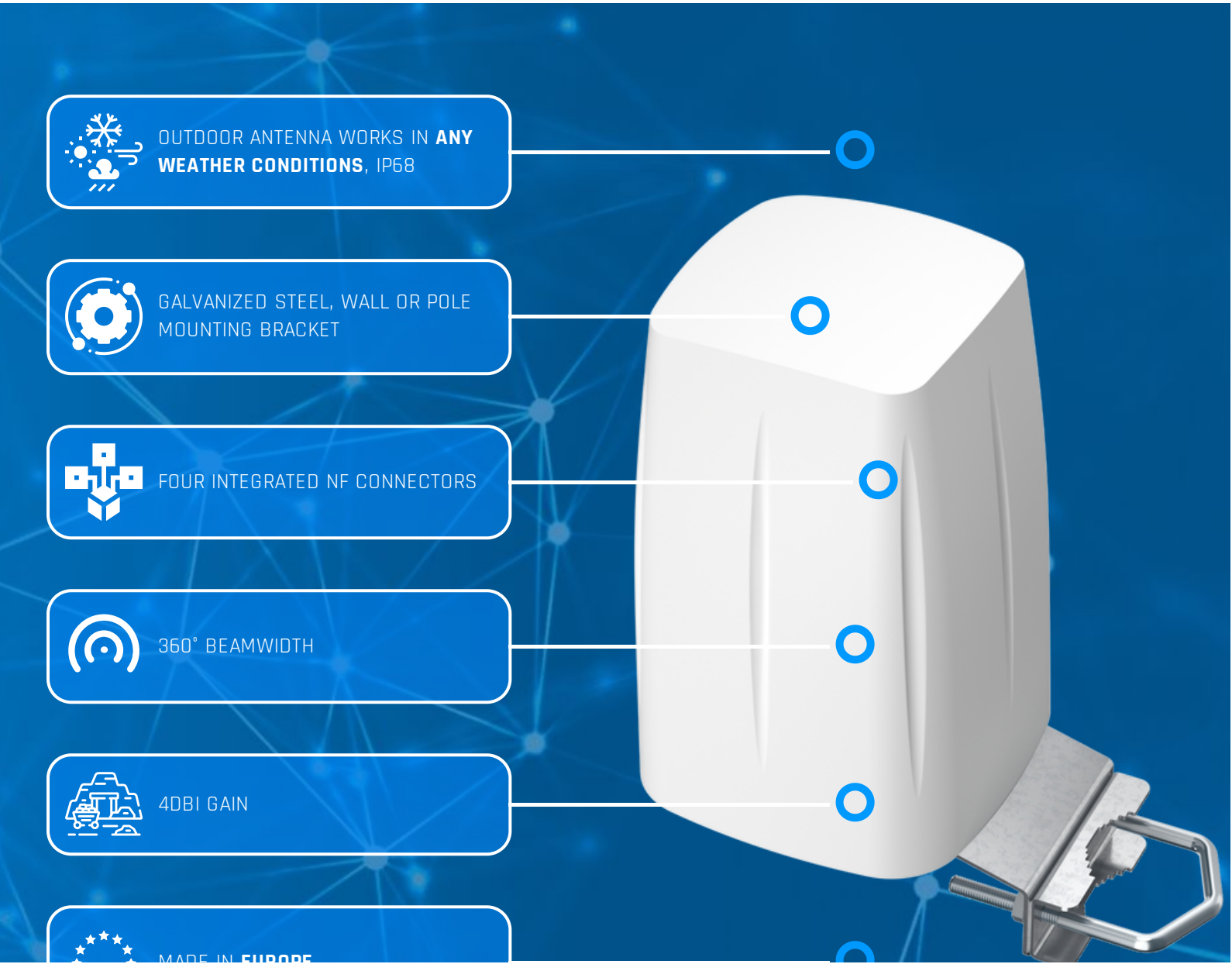

LTE ANTENNA SPECIFICATION

FREQUENCY	694 - 960 MHz 1.7 - 2.2 GHz 2.5 - 2.7 GHz
GAIN	694 - 960 MHz : 2 dBi 1.7 - 2.2 GHz : 2 dBi 2.5 - 2.7 GHz : 3 dBi
SUPPORTED LTE/5G BANDS	1, 2, 3, 4, 5, 7, 8, 9, 10, 12, 13, 14, 17, 18, 19, 20, 25, 26, 27, 28, 29, 33, 34, 35, 36, 37, 38, 39, 44, 65, 66, 67, 68, 69, 85, 103, n80, n81, n82, n83, n84, n86, n89, n95, n98, n100, n101, n256
VSWR	<1.50, max <2.50
BEAMWIDTH	360°/25° ±5°
POLARIZATION	Vertical
IMPEDANCE	50 Ω

Copyright © 2023, Wireless Instruments. Specifications and information given in this document are subject to change without prior notice.

MECHANICAL SPECIFICATION

MATERIALS	ABS, aluminum, PTFE
INGRESS PROTECTION	IP68
DIMENSIONS	160 x 160 x 240 mm 6.3 x 6.3 x 9.45 inch
WEIGHT	1.5 kg 3.31 lbs
OPERATING TEMPERATURE	From -40°C to 80°C From -40°F to 176°F
CONNECTOR TYPE	4x Nf connectors
MAST DIAMETER	40-60 mm 1.57-2.36 inch

FREQUENCY BANDS

LTE / 4G GSM	617 MHz	5	8	12	13	14	17	18	960 MHz
		19	20	26	27	28	29	44	
		67	68	85	103	n81	n82	n83	
		n89	n100						
LTE / 4G UMTS	1710 MHz	1	2	3	4	9	10	25	2170 MHz
		33	34	35	36	37	39	n80	
		n84	n86	n95	n98	n101			

Copyright © 2023, Wireless Instruments. Specifications and information given in this document are subject to change without prior notice.

LTE / 4G	2400 MHz	7	38	69	2700 MHz

COMPATIBLE ROUTERS

VARIANT: AOLM4-N

TELTONIKA	RUTX12, RUTX14
ROBUSTEL	EG5200, R2000
COMSET	CM770W-6
CRADLEPOINT	IBR1700
DIGI	TX54 LTE-Advanced
FIBOCOM	NL952-EAU, NL952-NA
FORTINET	FEX-311F, FEX-311F
PEPLINK	BR1 Pro (CAT-20), BR1 Pro CAT-20, MAX HD2, MAX HD2 Mini, MAX Transit, UBR Plus
QUECTEL	LTE-A EM160R-GL
ROBUSTEL	EG5200, R2000
TELIT CINTERION	LM960A18 Series
TELTONIKA	RUTX12, RUTX14
OTHER	4 * SMA

Copyright © 2023, Wireless Instruments. Specifications and information given in this document are subject to change without prior notice.

PLOTS

VSWR

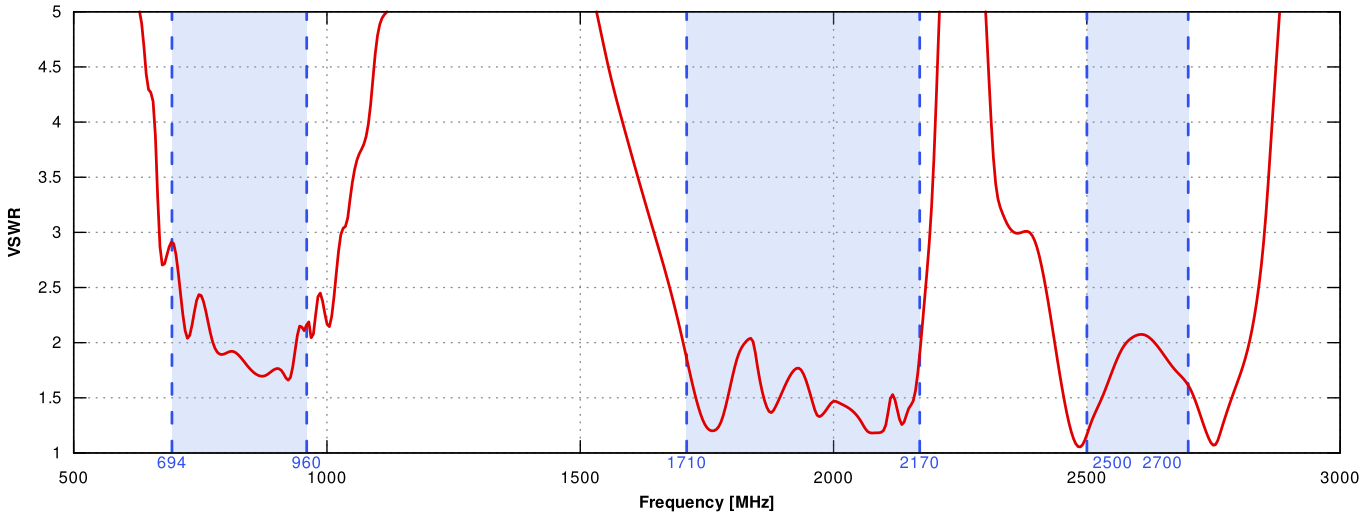

Gain

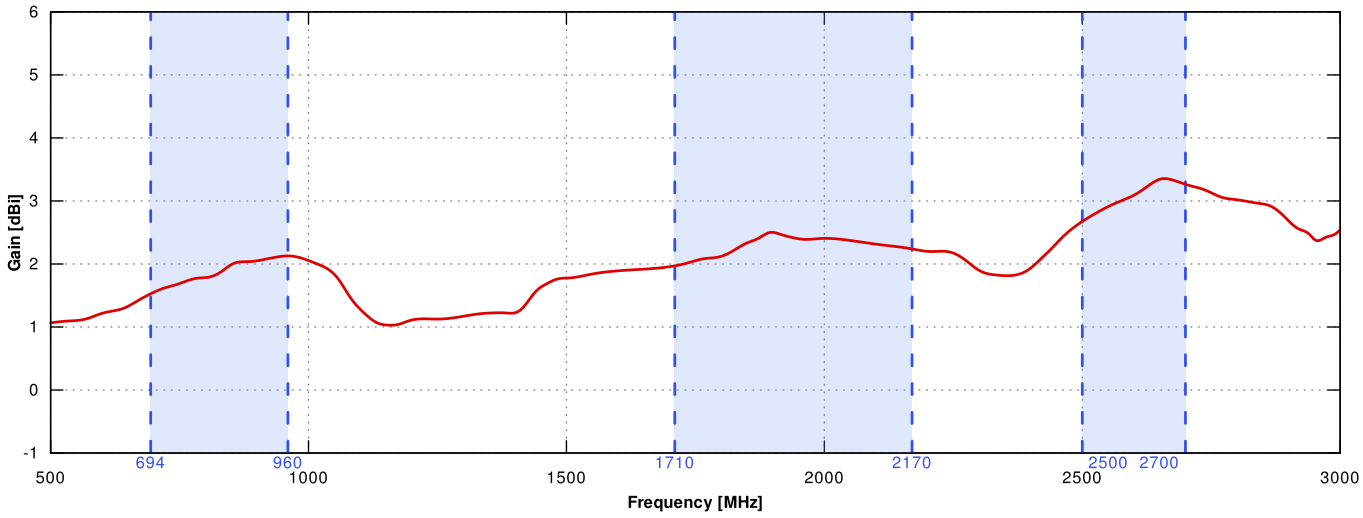

Copyright © 2023, Wireless Instruments. Specifications and information given in this document are subject to change without prior notice.

From 700MHz to 900MHz

ELEVATION

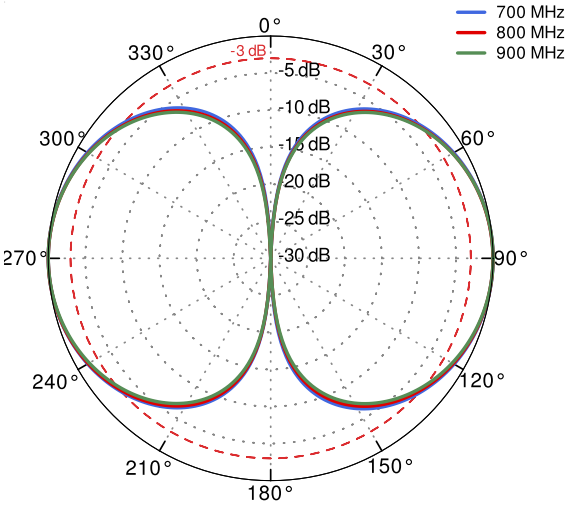

AZIMUTH

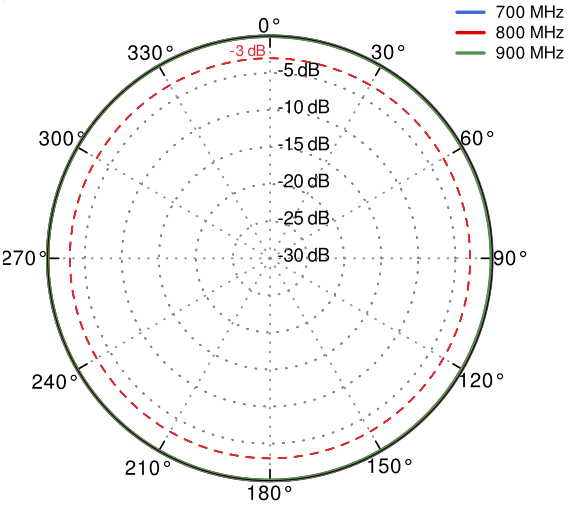

From 1.71GHz to 2.17GHz

ELEVATION

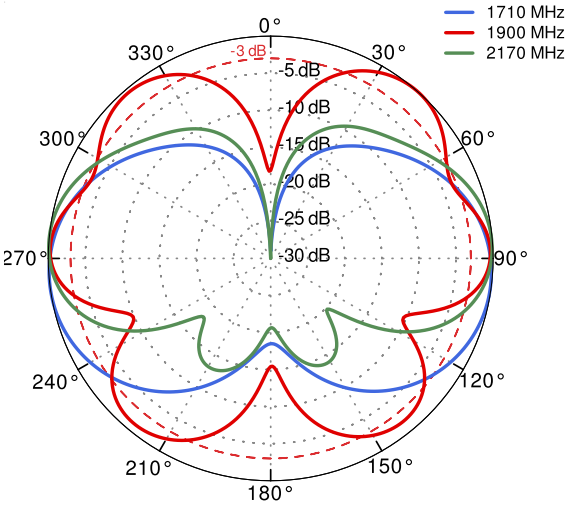

AZIMUTH

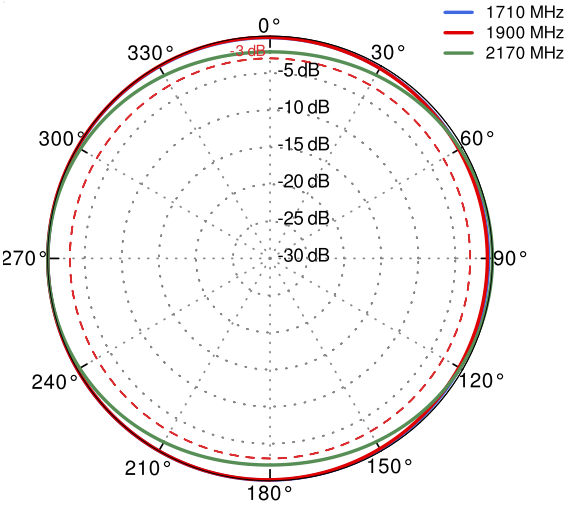

Copyright © 2023, Wireless Instruments. Specifications and information given in this document are subject to change without prior notice.

From 2.5GHz to 2.7GHz

ELEVATION

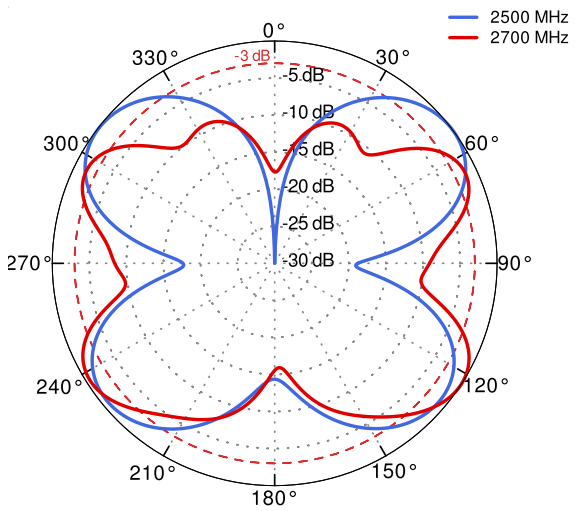

AZIMUTH

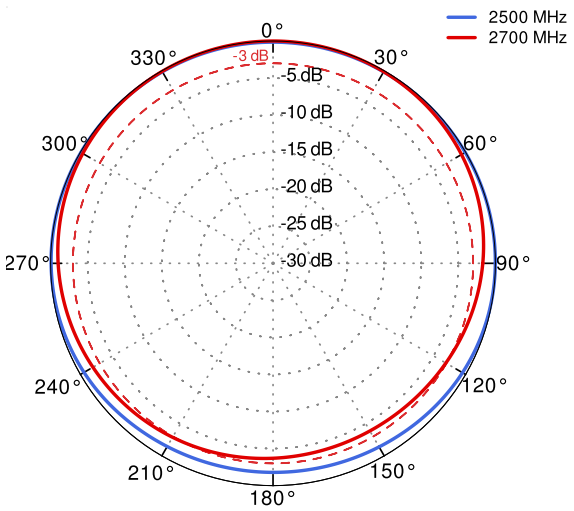

DIMENSIONS

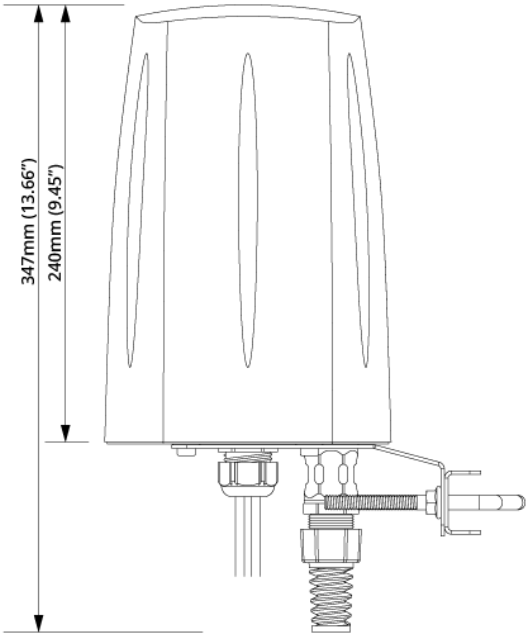

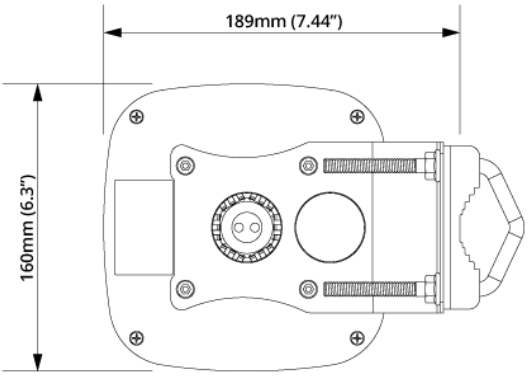

QuWireless
WWW.QUWIRELESS.COM
Sales email: sales@quwireless.com **Tel:** +48 513 900 416
Support email: support@quwireless.com **Website:** www.quwireless.com
Address: Wireless Instruments Sp. z o.o., ul. Kościuszki 27, 52-116 Iwiny, Poland

Copyright © 2023, Wireless Instruments. Specifications and information given in this document are subject to change without prior notice.